WAFER BUTTERFLY VAVLE HERIOS

WWW.HERIOS.KR INFO@HERIOS.KR

WAFER PATTERN BUTTERFLY VALVE MODEL: MKZ

TECHNICAL DATA

Nominal diameter:	DN 20 – DN 1200 (DN 20 only PN10/16)
Face-to-face:	EN 558 Series 20 (DIN 3202 T3 K1) ISO 5752 Series 20 API 609 Table 1 BS 5155 Series 4
Flange accommodation:	DIN 2501 PN 6/10/16 ANSI B 16.5, Class 150 MSS SP44 Class 150 AWWA C 207 AS 2129 Table D and E BS 10 Table D and E JIS B 2211-5 K JIS B 2212-10 K
Lap-joint flange:	DIN 2641 and DIN 2642
Weld-on flange:	DIN 2576
Flange Surface Design:	DIN 2526, Form A-E, ANSI RF
Top flange:	EN ISO 5211 NF E 29-402
Marking:	DIN EN 19
Tightness check:	DIN 3230 T3 BO, BN (Leakage Rate 1) ISO 5208, Category 3 API 598 Table 5 ANSI B 16-104, Class VI
Temperature range:	–20 °C to + 160 °C (depending on pressure, medium and material)
Operating pressure:	max. 16 bar
Differential pressure:	max. Δp 16 bar
Vacuum:	0,2 bar absolute (depending on medium and temperature)

A universally applicable wafer type valve acc. to EN 593.
The large variety of basic materials allows applications in diffe
industries.

FEATURES

- Absolutely tight sealing with flow in either direction
- The valve body and disc are accurately machined which results in low operating torque and long service life and reliability.
- Triple shaft bearings prevents shaft deflection and guarantees optimum guidance even after many years of operational service.
- Four flange mounting holes ensure correct valve location when installing.
- Single flange mounting is possible (please request details from our Technical Department).
- Can be installed in any desired position.
- Maintenance-free
- Can be disassembled, material-specific recycling possible

GENERAL APPLICATIONS

- Chemical and petrochemical industries
- Water and wastewater technology
- Pneumatic materials handling technology
- Shipbuilding
- Power generation industry
- Food industry
- Civil engineering
- For paint and laquers, a silicon-free Version is available.

WWW.HERIOS.KR INFO@HERIOS.KR

WAFER PATTERN BUTTERFLY VALVE MODEL: MKZ

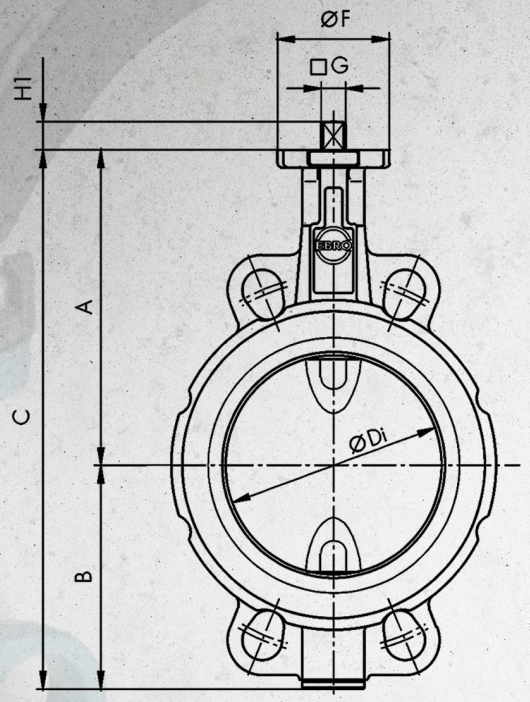

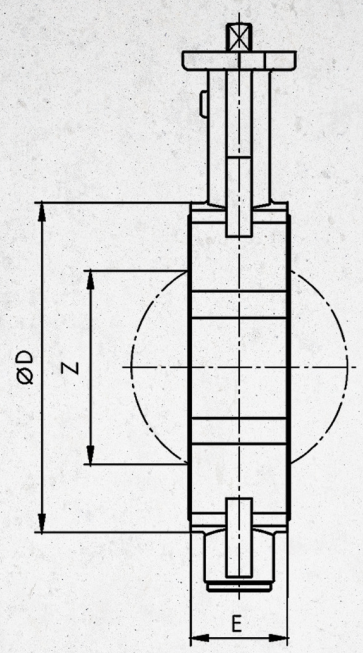

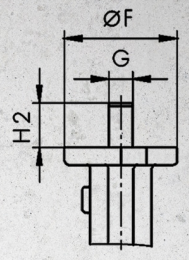

Optional shaft end:
Double flat acc. to
EN ISO 5211

MKZ with bare shaft end according to EN ISO 5211

DN [mm]	Size [in]	Dimensions [mm] A	B	C	D	Di	E	F	Flange	G	H1	H2	Z	Weight [kg] (GG-25) 2 Piece Shaft	TS-Shaft
20	3/4	104	45	149	59	31,5	33	54	F04	11	12	19	–	1,3	–
25	1	104	45	149	63	31,5	33	54	F04	11	12	19	–	1,3	–
32	1 1/4	104	50	154	68	31,5	33	54	F04	11	12	19	–	1,4	–
40	1 1/2	113	66	179	80	38	33	54	F04	11	12	19	22	1,8	–
50	2	126	84	210	95	48,5	43	54	F04	11	12	19	25	2,2	–
65	2 1/2	134	93	227	115	63,5	46	54	F04	11	12	19	45	2,9	–
80	3	157	104	261	138	78,5	46	65	F05	14	16	25	65	4,0	4,5
100	4	167	115	282	158	98,5	52	65	F05	14	16	25	85	5,2	5,8
125	5	180	127	307	188	123,5	56	65	F05	14	16	25	111	6,9	7,5
150	6	203	150	353	212	148	56	90	F07	17	19	30	139	9,5	11,0
200	8	228	176	404	268	199	60	90	F07	17	19	30	190	13,2	15,0
250	10	266	212	478	320	248	68	125	F10	22	24	39	240	22,5	25,5
300	12	291	237	528	370	296	78	125	F10	22	24	39	287	31,5	35,0
350	14	332	269	601	408	338	78(92)**	150	F12	*	*	–	330	39,4	45,0
400	16	363	314	677	470	388	102	150	F12	*	*	–	378	58,7	64,5
450	18	397	335	732	530	430,5	114	210	F16	*	*	–	417	91,0	95,5
500	20	437	405	842	574	494,5	127	210	F14/F16	*	*	–	474	107,0	113,5
600	24	498	469	967	675	590	154	300	F16/F25	*	*	–	563	171,0	198,0
700	28	581	507	1088	772	680	165	300	F16/F25	*	*	–	660	251,0	304,0
800	32	630	556	1186	874	780	190	300	F25	*	*	–	757	355,0	375,0
900	36	696	617	1313	973	880	203	300	F25	*	*	–	860	456,0	498,0
1000	40	771	675	1446	1070	980	216	350	F30	*	*	–	956	570,0	718,0
1200	48	880	810	1690	1510	1170	254	350	F30	*	*	–	1154	–	1156,0

* according to the mounted actuator
** face to face dim. acc. to EN 558 Tab. 20 (92 mm)

Subject to change without notice.

MATERIAL SPECIFICATION AND PARTS LIST

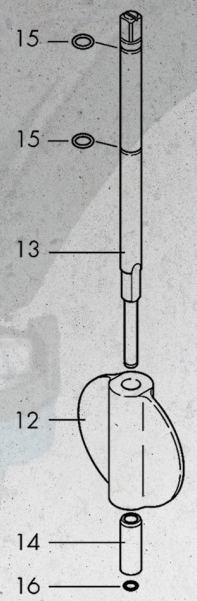

TS-Version

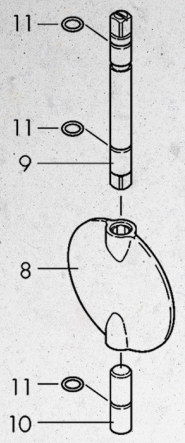

Version with splitted shaft

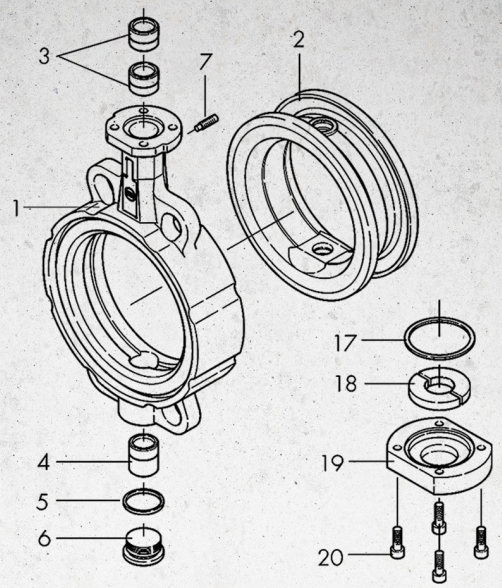

Pts. 17-20:
Cover plate for
Valve ≥ DN 350

Pt.	Description	Material	Material-No.	ASTM
1	**Body**			
	Aluminiumalloy	G-AlSi9Cu3	3.2163	B 380.1
		G-AlSi10Mg	3.2381	361.1
	Grey Cast Iron	GG-25	0.6025	40 B
	Nodular Cast Iron	GGG-40	0.7040	60-40-18
		GGG-40.3	0.7043	
	Carbon Steel	GS-C25	1.0619	WCB
	Stainless Steel	G-X5CrNiMo19-11-2	1.4408	CF8M
	Aluminium Bronze	G-CuAl10Ni	2.0975	C 95800
2	**Seat**			
	NBR	Acrylonitrile butadiene rubber		
	EPDM	Ethylene propylene caoutchouc		
	PTFE	Polytetrafluoroethylene		
	FPM	Fluorocarbon caoutchouc		
	VITON	FluorinatedbHydrocarbon Polymers		
	AU	Polyurethane elastomer		
3/4	**Bearing bush**			
	Brass	MS 58	2.0401	B45
	Polyamide	PA 66		
	PTFE	Polytetraflourethylen		
5	**Seal DIN 7603**			
	Copper	Cu		Copper
6	**Plug screw DIN 908**			
	Stainless Steel	G-X5CrNiMo19-11-2	1.4408	CF8M
7	**Set screw DIN 915**			
	Steel	45 H galvanized		
	Stainless Steel	A4-70		B8M
8	**Disc**			
	Steel	St 52.3	1.0570	572-50
	Stainless Steel	G-X5CrNiMo19-11-2	1.4301	304
		G-X6CrNiMo18-10	1.4408	CF8M
		X2CrNiMo17-12-2	1.4404	316 L
		X6CrNiMoTi17-12-2	1.4571	316 Ti
		G-X2CrNiMoN26-7-4	1.4469	F 51
		Hastelloy	2.4883	Hastelloy
	Aluminium Bronze	G-CuAl10Ni	2.0975	C 95800
	Coating	Halar, Rilsan		
	Surface Quality	electropolished, mirror finished		

Pt.	Description	Material	Material-No.	ASTM
9/10	**Shafts**			
	Stainless Steel	X39CrMo17-1	1.4122	
		X14CrMoS17	1.4104	430 F
		X5CrNiMo17-12-2	1.4401	316
		Hastelloy	2.4883	Hastelloy
	Aluminium Bronze	CuAl10Ni	2.0975	
11	**O-ring**			
	NBR	Acrylonitrile butadiene rubber		
	FPM	Fluorocarbon caoutchouc		
12	**TS-disc**			
	Nodular Cast Iron	GGG-40	0.7040	60-40-18
	Stainless Steel	G-X5CrNiMo19-11-2	1.4408	CF8M
	Aluminium Bronze	G-CuAl10Ni	2.0975	C 95800
	Coating	Halar, Rilsan		
	Surface Quality	electropolished, mirror finished		
13	**TS-shaft**			
	Stainless Steel	X14CrMoS17	1.4104	430F
		X39CrMo17-1	1.4122	
		X5CrNiMo17-12-2	1.4401	316
	Aluminium Bronze	CuAl10Ni	2.0975	
14	**Sleeve**			
	Stainless Steel	X5CrNi18-10	1.4301	304
15	**O-ring**			
	NBR	Acrylonitrile butadiene rubber		
	FPM	Fluorocarbon caoutchouc		
16	**Retainin ring**			
	Stainless Steel	X39CrMo17-1	1.4122	
17	**O-ring**			
	NBR	Acrylonitrile butadiene rubber		
18	**Shaft retainer**			
	Brass	MS 58	2.0401	B45
19	**Cover plate**			
	Grey Cast Iron	GG-25	0.6025	40 B
20	**Screw**			
	Steel	45 H galvanized		
	Stainless Steel	A2-70		B8
		A4-70		B8M
	Other materials upon request.			

WWW.HERIOS.KR INFO@HERIOS.KR

MATERIAL SPECIFICATION AND PARTS LIST-U TYPE

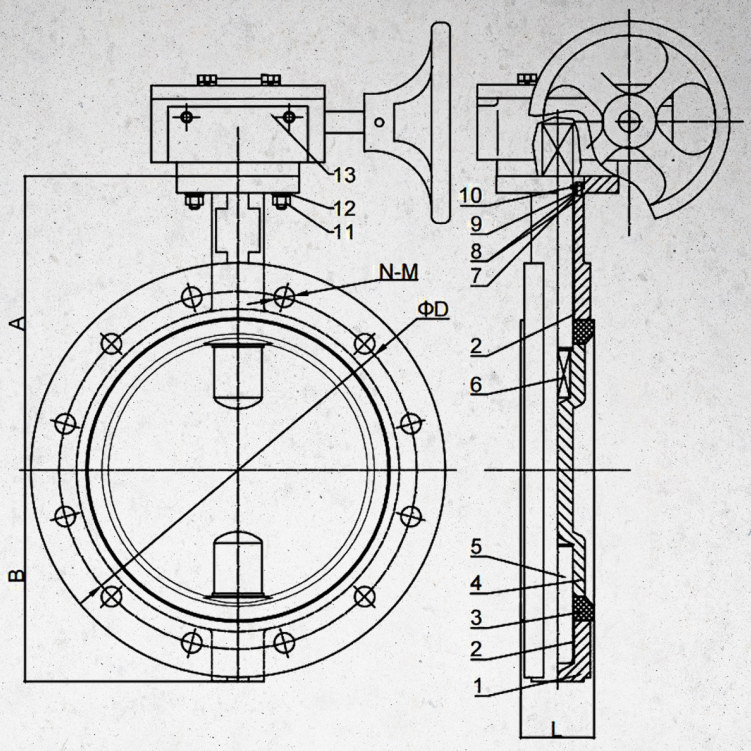

Pt.	Description	Material	Material-No.	ASTM
1	**Body**			
	Aluminiumalloy	G-AlSi9Cu3	3.2163	B 380.1
		G-AlSi10Mg	3.2381	361.1
	Grey Cast Iron	GG-25	0.6025	40 B
	Nodular Cast Iron	GGG-40	0.7040	60-40-18
		GGG-40.3	0.7043	
	Carbon Steel	GS-C25	1.0619	WCB
	Stainless Steel	G-X5CrNiMo19-11-2	1.4408	CF8M
	Aluminium Bronze	G-CuAl10Ni	2.0975	C 95800
2	**Seat**			
	NBR	Acrylonitrile butadiene rubber		
	EPDM	Ethylene propylene caoutchouc		
	PTFE	Polytetrafluoroethylene		
	FPM	Fluorocarbon caoutchouc		
	VITON	FluorinatedbHydrocarbon Polymers		
	AU	Polyurethane elastomer		
3/4	**Bearing bush**			
	Brass	MS 58	2.0401	B45
	Polyamide	PA 66		
	PTFE	Polytetraflourethylen		
5	**Seal DIN 7603**			
	Copper	Cu		Copper
6	**Plug screw DIN 908**			
	Stainless Steel	G-X5CrNiMo19-11-2	1.4408	CF8M
7	**Set screw DIN 915**			
	Steel	45 H galvanized		
	Stainless Steel	A4-70		B8M
8	**Disc**			
	Steel	St 52.3	1.0570	572-50
	Stainless Steel	G-X5CrNiMo19-11-2	1.4301	304
		G-X6CrNiMo18-10	1.4408	CF8M
		X2CrNiMo17-12-2	1.4404	316 L
		X6CrNiMoTi17-12-2	1.4571	316 Ti
		G-X2CrNiMoN26-7-4	1.4469	F 51
		Hastelloy	2.4883	Hastelloy
	Aluminium Bronze	G-CuAl10Ni	2.0975	C 95800
	Coating	Halar, Rilsan		
	Surface Quality	electropolished, mirror finished		

Pt.	Description	Material	Material-No.	ASTM
9/10	**Shafts**			
	Stainless Steel	X39CrMo17-1	1.4122	
		X14CrMoS17	1.4104	430 F
		X5CrNiMo17-12-2	1.4401	316
		Hastelloy	2.4883	Hastelloy
	Aluminium Bronze	CuAl10Ni	2.0975	
11	**O-ring**			
	NBR	Acrylonitrile butadiene rubber		
	FPM	Fluorocarbon caoutchouc		
12	**TS-disc**			
	Nodular Cast Iron	GGG-40	0.7040	60-40-18
	Stainless Steel	G-X5CrNiMo19-11-2	1.4408	CF8M
	Aluminium Bronze	G-CuAl10Ni	2.0975	C 95800
	Coating	Halar, Rilsan		
	Surface Quality	electropolished, mirror finished		
13	**TS-shaft**			
	Stainless Steel	X14CrMoS17	1.4104	430F
		X39CrMo17-1	1.4122	
		X5CrNiMo17-12-2	1.4401	316
	Aluminium Bronze	CuAl10Ni	2.0975	
14	**Sleeve**			
	Stainless Steel	X5CrNi18-10	1.4301	304
15	**O-ring**			
	NBR	Acrylonitrile butadiene rubber		
	FPM	Fluorocarbon caoutchouc		
16	**Retainin ring**			
	Stainless Steel	X39CrMo17-1	1.4122	
17	**O-ring**			
	NBR	Acrylonitrile butadiene rubber		
18	**Shaft retainer**			
	Brass	MS 58	2.0401	B45
19	**Cover plate**			
	Grey Cast Iron	GG-25	0.6025	40 B
20	**Screw**			
	Steel	45 H galvanized		
	Stainless Steel	A2-70		B8
		A4-70		B8M
	Other materials upon request.			

WWW.HERIOS.KR INFO@HERIOS.KR

MATERIAL SPECIFICATION AND PARTS LIST-LUG TYPE

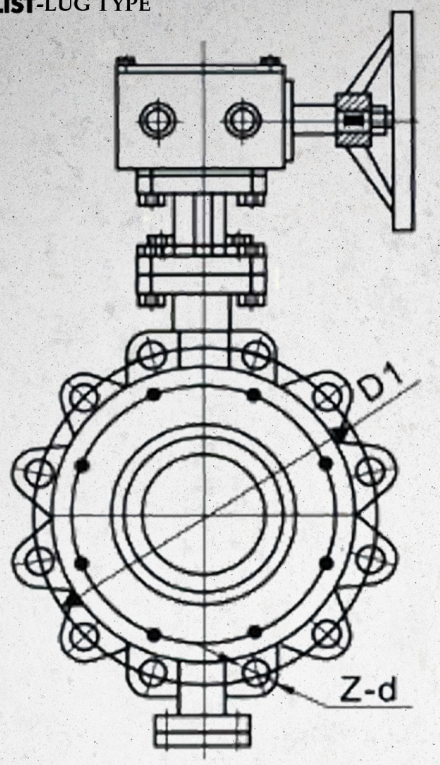

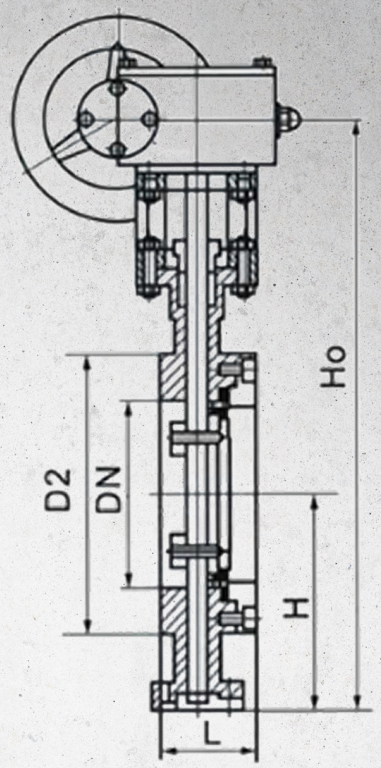

Pt.	Description	Material	Material-No.	ASTM
1	**Body**			
	Aluminiumalloy	G-AlSi9Cu3	3.2163	B 380.1
		G-AlSi10Mg	3.2381	361.1
	Grey Cast Iron	GG-25	0.6025	40 B
	Nodular Cast Iron	GGG-40	0.7040	60-40-18
		GGG-40.3	0.7043	
	Carbon Steel	GS-C25	1.0619	WCB
	Stainless Steel	G-X5CrNiMo19-11-2	1.4408	CF8M
	Aluminium Bronze	G-CuAl10Ni	2.0975	C 95800
2	**Seat**			
	NBR	Acrylonitrile butadiene rubber		
	EPDM	Ethylene propylene caoutchouc		
	PTFE	Polytetrafluoroethylene		
	FPM	Fluorocarbon caoutchouc		
	VITON	FluorinatedbHydrocarbon Polymers		
	AU	Polyurethane elastomer		
3/4	**Bearing bush**			
	Brass	MS 58	2.0401	B45
	Polyamide	PA 66		
	PTFE	Polytetraflourethylen		
5	**Seal DIN 7603**			
	Copper	Cu		Copper
6	**Plug screw DIN 908**			
	Stainless Steel	G-X5CrNiMo19-11-2	1.4408	CF8M
7	**Set screw DIN 915**			
	Steel	45 H galvanized		
	Stainless Steel	A4-70		B8M
8	**Disc**			
	Steel	St 52.3	1.0570	572-50
	Stainless Steel	G-X5CrNiMo19-11-2	1.4301	304
		G-X6CrNiMo18-10	1.4408	CF8M
		X2CrNiMo17-12-2	1.4404	316 L
		X6CrNiMoTi17-12-2	1.4571	316 Ti
		G-X2CrNiMoN26-7-4	1.4469	F 51
		Hastelloy	2.4883	Hastelloy
	Aluminium Bronze	G-CuAl10Ni	2.0975	C 95800
	Coating	Halar, Rilsan		
	Surface Quality	electropolished, mirror finished		

Pt.	Description	Material	Material-No.	ASTM
9/10	**Shafts**			
	Stainless Steel	X39CrMo17-1	1.4122	
		X14CrMoS17	1.4104	430 F
		X5CrNiMo17-12-2	1.4401	316
		Hastelloy	2.4883	Hastelloy
	Aluminium Bronze	CuAl10Ni	2.0975	
11	**O-ring**			
	NBR	Acrylonitrile butadiene rubber		
	FPM	Fluorocarbon caoutchouc		
12	**TS-disc**			
	Nodular Cast Iron	GGG-40	0.7040	60-40-18
	Stainless Steel	G-X5CrNiMo19-11-2	1.4408	CF8M
	Aluminium Bronze	G-CuAl10Ni	2.0975	C 95800
	Coating	Halar, Rilsan		
	Surface Quality	electropolished, mirror finished		
13	**TS-shaft**			
	Stainless Steel	X14CrMoS17	1.4104	430F
		X39CrMo17-1	1.4122	
		X5CrNiMo17-12-2	1.4401	316
	Aluminium Bronze	CuAl10Ni	2.0975	
14	**Sleeve**			
	Stainless Steel	X5CrNi18-10	1.4301	304
15	**O-ring**			
	NBR	Acrylonitrile butadiene rubber		
	FPM	Fluorocarbon caoutchouc		
16	**Retainin ring**			
	Stainless Steel	X39CrMo17-1	1.4122	
17	**O-ring**			
	NBR	Acrylonitrile butadiene rubber		
18	**Shaft retainer**			
	Brass	MS 58	2.0401	B45
19	**Cover plate**			
	Grey Cast Iron	GG-25	0.6025	40 B
20	**Screw**			
	Steel	45 H galvanized		
	Stainless Steel	A2-70		B8
		A4-70		B8M
	Other materials upon request.			

WWW.HERIOS.KR INFO@HERIOS.KR

TORQUE

- The torque values specified (MD) are based on liquid and lubricant media.
- Powdery (non-lubricant) media Md x 1,3
- Dry gases/high viscous media Md x 1,2
- The values specified are based on the initial breakaway torque.
- Dynamic torque specification available upon request.

Regarding the dimensioning of actuators, please contact our engineers.

DN [mm]	Size [in]	Operating Pressure 3 [bar]	6 [bar]	10 [bar]	16 [bar]
20	3/4	–	–	5	–
25	1	–	–	5	–
32	1 1/4	–	–	5	–
40	1 1/2	–	–	6	8
50	2	5	7	7	9
65	2 1/2	7	9	15	18
80	3	8	10	18	24
100	4	9	18	28	37
125	5	15	22	45	59
150	6	36	45	110	125
200	8	59	76	140	200
250	10	150	180	200	240
300	12	200	240	280	360
350	14	350	540	610	700
400	16	420	620	750	850
450	18	720	746	860	1500
500	20	900	1100	2255	3690
600	24	1050	2100	3000	5830
700	28	1560	2240	3450	8100
800	32	2070	3800	6600	11 200
900	36	2700	4900	7100	14 500
1000	40	4600	6780	11 500	24 400
1200	48	7800	12 000	21 000	44 000

All Values in Nm

K_V-VALUES

- The K_V-value (m^3per hour) is the flow of water at a temperature of 5 °C to 30 °C (41°F to 86°F) at Δp of 1 bar.
- The K_V-values specified are based on tests carried out by the Delfter Hydraulics Laboratories, the Netherlands.
- Permissible velocity of flow Vmax 4,5 m/s for liquids and Vmax 70 m/s for gases.
- The throttle function is linear at an angle 30° to 70°.
- Avoid cavitation!

For further values, please contact our engineers.

DN [mm]	Size [in]	Opening angel α° 20°	30°	40°	50°	60°	70°	80°	90°
20	3/4	–	1	4	8	11	19	27	32
25	1	–	1,5	5	10	15	24	32	36
32	1 1/4	–	1,5	5	11	16	27	35	40
40	1 1/2	–	2,2	8	15	21	33	43	50
50	2	1,2	8	13	22	38	50	65	85
65	2 1/2	2	9	22	42	77	115	170	215
80	3	8	24	50	95	150	240	330	420
100	4	13	28	65	130	180	340	550	800
125	5	26	65	130	230	350	530	870	1010
150	6	35	90	200	360	640	900	1350	2100
200	8	43	180	350	580	1000	1600	3000	4000
250	10	125	360	660	1100	1800	3100	5300	6400
300	12	200	550	1000	1600	2600	5000	7500	8500
350	14	350	780	1400	2400	4000	8000	10 800	11 500
400	16	490	1050	1800	3100	5500	11 000	12 000	14 500
450	18	510	1080	2040	3350	6100	11 500	14 600	20 500
500	20	520	1100	2200	3500	6200	12 000	15 100	21 000
600	24	750	1400	2800	5100	8800	14 000	22 000	29 300
700	28	770	1755	3260	5980	10 600	17 100	25 300	36 000
800	32	1200	2260	4550	8230	12 900	20 300	29 300	44 600
900	36	1540	2280	6030	10 500	17 600	29 200	42 150	59 000
1000	40	2200	3970	8300	14 480	24 000	37 100	60 300	81 500
1200	48	5050	7900	13 800	19 700	33 500	53 300	73 050	102 650

Manufacturer: HERIOS

- Korea Office:

  Address: 6381 Bongeunsa-ro, Icheon-si, Gyeonggi,South Korea

- Italy Office:

  Address: Viale Luca Gaurico, 9/11, 00143 Roma RM, Italy

  Tel: + 39 342 978 800

  Tel: + 82 10-4888-2816

  Fax: + 82 10-4888-2816

  Email: info@herios.kr

  Homepage : https://herios.kr/