PNEUMATIC ACTUATORS HERIOS

WWW.HERIOS.KR INFO@HERIOS.KR

MKH ACTUATOR INFORMATION

Example	MKH	520	FC		2P		100		SM2		JS	MKH series, 520mm bore, single action with spring normally closed type actuator, double piston motion,100 mm stroke, with SM2 side-mounted bevel gear manual mechanism, with JS manual deceleration mechanism
Series	MKH											MKH Series straight stroke pneumatic actuator
		520										
Working Form			DA									Double Acting
			FL									Failure Lock
			FC									Single Acting With Spring Failure Close
			FO									Single Acting With Spring Failure Open
			CC									Double Acting With Gas Tank Failure Close
			CO									Double Acting with Gas Tank Failure Open
Number of Pistons					1							Single Piston Movement
					2							Double Piston Linkage
					3							Three-piston Linkage
					4							Four-piston Linkage
					5							Five-piston Linkage
Actuator Stroke							10_2000					
Manual Mechanism									TM1			Manual Overhead screw (Easy to opreate)
									TM2			Manual switching Overhead (Save space)
									T3/TM4/TM5			Manual Overhead side mounted bevel gear (Three gears are optional)
									SM1/SM2/SM3			Manual central side-mounted bevel gears (Three gears are optional)
									BA000/BA00/BA0 BA1/BA2/BA3			Manual Overhead side mounted turbine (six gears are optional)
									HD			Manual hydraulic (with hydraulic cylinder)
Other Accessories											JS	Manual speed reduction mechanism (with SM manual)
											ZJ1	Standard bracket: F10,F12,F14,F16
											ZJ2	Ordinary bracket

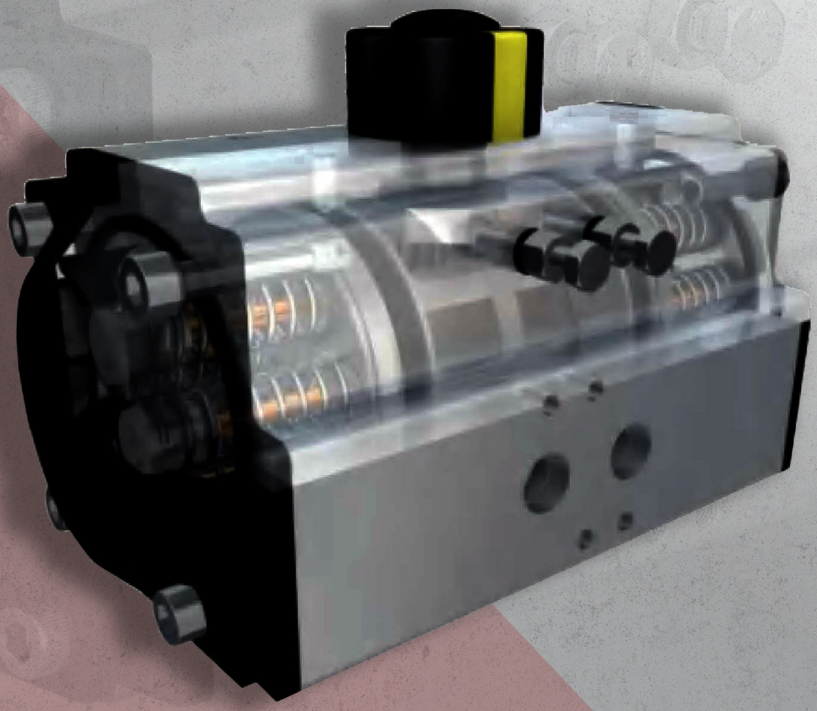

WWW.HERIOS.KR INFO@HERIOS.KR

STRUCTURAL FEATURES

1. Extruded aluminum ASTM6005 body with both internal and external corrosion protection having honed cylinder surface for longer life and low coefficient of friction.

2. Dual piston rack and pinion design for compact construction, symmetric mounting position, high-cycle life and fast operation reverse rotation can be accomplished in the field by simply inverting the pistons.

3. Modular pre-loaded spring cartridge design, with coated spring for simple versatile range, greater safely and corrosion resistance, longer cycle life.

4. Fully machined teeth on piston and pinion for accurate low backlash rack and pinion engagement, maximum efficiency.

5. Multiple bearings and guides on racks and pistons, low friction, high cycle life and prevent shaft blowout.

6. We has a complete line of rack and pinion actuators, which is the best choice for butterfly and bass valves control. Reliable, reality available products supplying in a broad of operating environments. our products are NAMUR & ISO5211 compliant and are manufactured under ISO 9001:2008 certification and are CE approved.

7. Full conformance to the latest specifications: ISO5211, DIN3337 and NAMUR or product interchange ability and easy mounting of solenoids, limit switches and other accessories.

8. Stainless steel fasteners for long term corrosion resistance.

MKH SERIES PNEUMATIC ACTUATOR
HERIOS , SOUTH KOREA

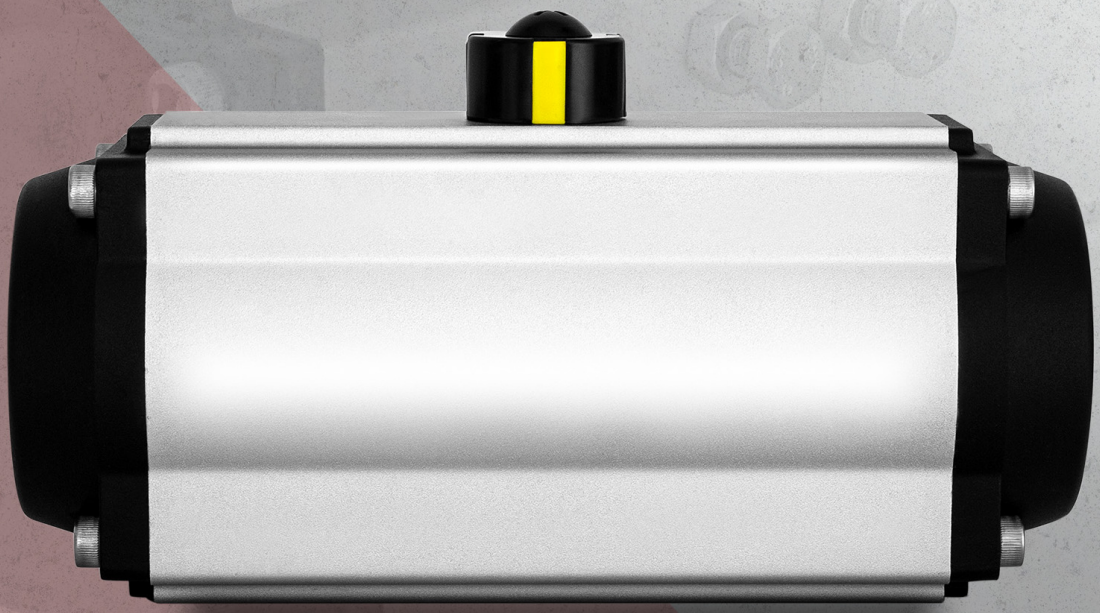

WWW.HERIOS.KR INFO@HERIOS.KR

MATERIAL INTRODUCTION

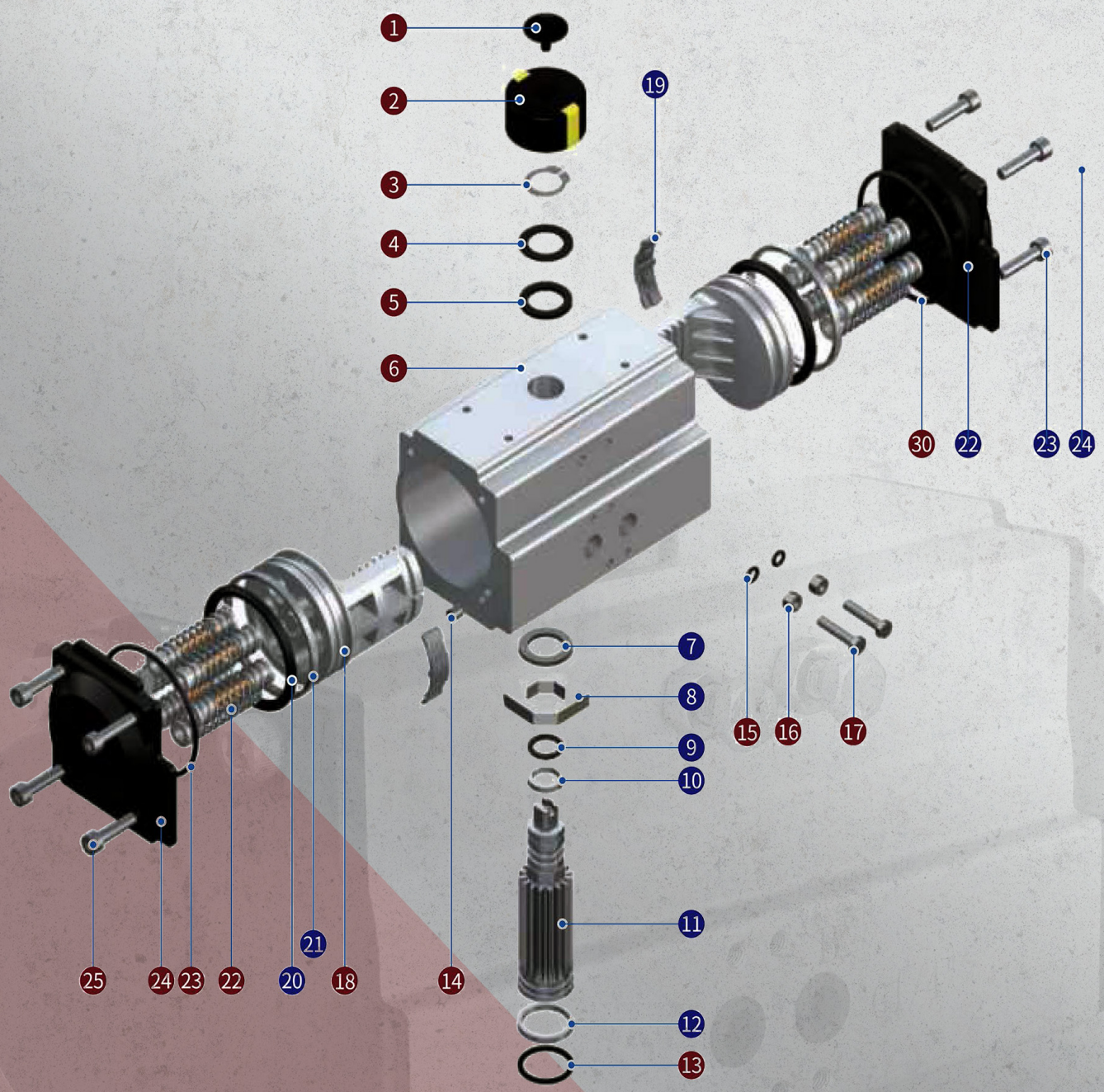

WWW.HERIOS.KR INFO@HERIOS.KR

MATERIAL INTRODUCTION

NO	Description	Qty	Material
1	Indicator Screw	1	plastic
2	Indicator	1	plastic
3	Snap Ring	1	Stainless steel
4	Washer	1	Stainless steel
5	Outside Washer	1	Engineering plastics
6	Body	1	Aluminum Alloy
7	Inside Washer	1	Engineering plastics
8	camshaft gear	1	Alloy steel
9	O-ring (Top)	1	NBR
10	Bearing (Top)	1	Engineering plastics
11	Pinion	1	Alloy steel
12	Bearing (Bottom)	1	Engineering plastics
13	O-ring (Bottom)	1	NBR
14	plug	2	NBR
15	Adjust Screw O-ring	2	NBR
16	Nut	2	stainless steel
17	Adjust Screw	2	stainless steel
18	Guide	2	Die-casting aluminum /steel
19	Guide Piston	2	Engineering plastics
20	Piston O-ring	2	NBR
21	Piston Bearing	2	Engineering plastics
22	Spring	0_12	Spring steel
23	End-cap O-ring	2	NBR
24	End-cap	2	Die-casting aluminum /steel
25	End-cap stop Screw	8	stainless steel

INSTALLATION SIZE TABLE

Unit.mm

Model	A	B	C	D	E	F	G	H	I	J	K	L	M	N	Z	Φ	Air Connection
MKH-52	30	41.5	65.5	72	92	65	30	80	φ36	φ50	4-M5x8	4-M6x10	P11:P2P11	14	147	40	NAMUR G1/4"
MKH-63	36	47	81	87.5	107.5	72	30	80	φ50	φ70	4-M6x10	4-M8x13	14	18	168	40	NAMUR G1/4"
MKH-75	42	53	94	99.5	119.5	81	30	80	φ50	φ70	4-M6x10	4-M8x13	14	18	184	40	NAMUR G1/4"
MKH-83	46	57	98.5	108.7	128.5	92	30	80	φ50	φ70	4-M6x10	4-M8x13	17	21	204	40	NAMUR G1/4"
MKH-92	50	58.5	111	116.5	136.5	98	30	80	φ50	φ70	4-M6x10	4-M8x13	17	21	262	40	NAMUR G1/4"
MKH-105	57.5	64	122.5	133	153	109.5	30	80	φ70	φ102	4-M8x13	4-M10x16	22	26	268	40	NAMUR G1/4"
MKH-125	67.5	74.5	145.5	155	185	127.5	30	130	φ70	φ102	4-M8x13	4-M10x16	22	26	301	55	NAMUR G1/4"
MKH-140	75	77	161	172	202	137.5	30	130	φ102	φ125	4-M10x16	4-M12x20	27	31	390	55	NAMUR G1/4"
MKH-160	87	87	184	197	227	158	30	130	φ102	φ125	4-M10x16	4-M12x20	27	31	458	55	NAMUR G1/4"
MKH-190	103	103	216	230	260	189	30	130		φ140		4-M16x25	36	50	525	80	NAMUR G1/4"
MKH-210	113	113	235.5	255	285	210	30	130		φ140		4-M16x25	36	50	532	80	NAMUR G1/4"
MKH-240	130	130	264.5	290	320	245	30	130		φ165		4-M20x25	46	60	602	80	NAMUR G1/4"
MKH-270	147	147	299	330	360	273	30	130		φ165		4-M20x25	46	60	722	80	NAMUR G1/2"
MKH-300	162	173	330	354	384	312	30	130		φ165		4-M20x25	46	60	820	80	NAMUR G1/2"
MKH-350	190	195	383	410	440	362	30	130		φ165		4-M20x25	46	60	900	80	NAMUR G1/2"
MKH-400	260	260	441	466	496	450	30	130	φ165	φ254	4-M20-25	4-M16x25	46	60	940	80	NAMUR G1/2"

WWW.HERIOS.KR INFO@HERIOS.KR

INSTALLATION AND OPERATING INSTURUCTION

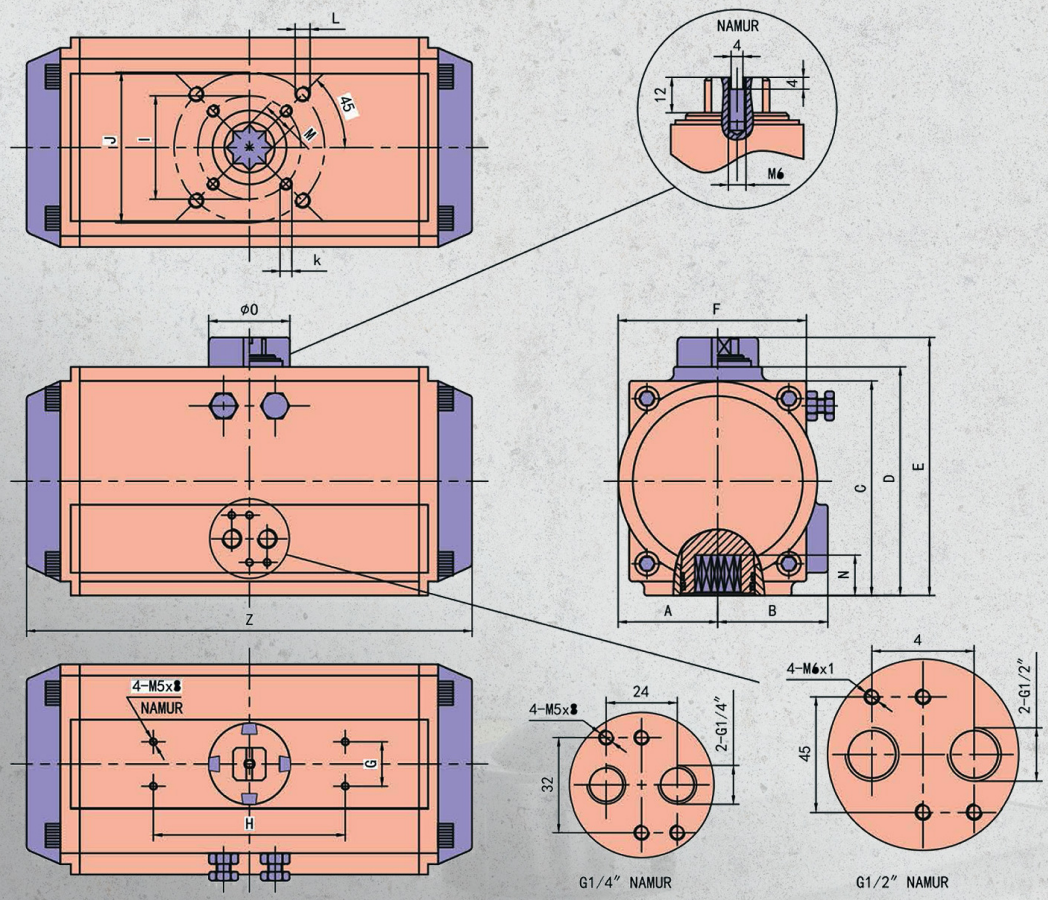

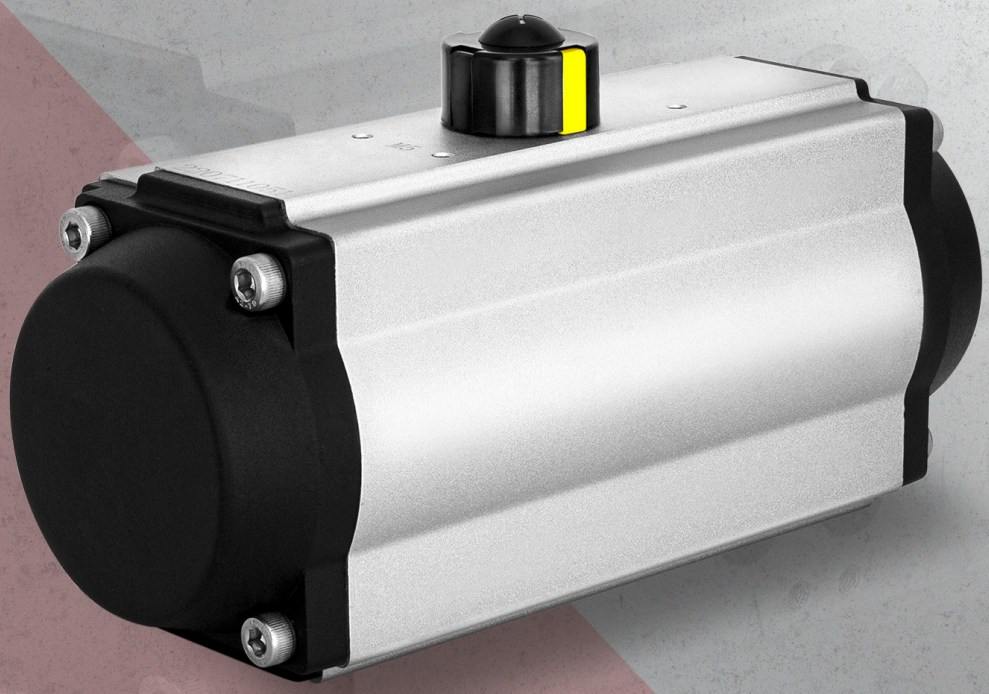

DOUBLE ACTING ACTUATOR

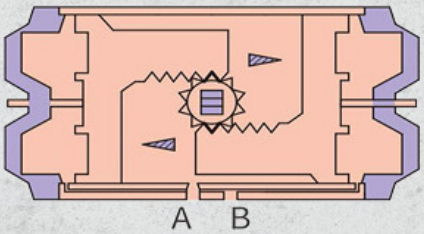

Air to Port B forces the pistons inwards, causing the pinion to turn counterclockwise while the air is being exhausted from Port A.

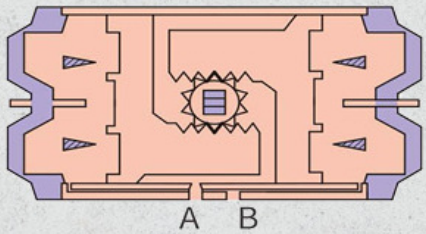

Air to Port A forces the pistons outwards, causing the pinion to turn counterclockwise While the air is being exhausted from Port B.

Output torque of MKH series double acting pneumatic actuator(Unit: NM)

Model	Air connection (Bar)									
	2	2.5	3	4	4.5	5	5.5	6	7	8
MKH-32-DA	3.1	3.8	4.6	6.1	6.9	7.6	8.4	9.2	10.7	12.2
MKH-45-DA	6.0	7.6	9.1	12.1	13.6	15.1	16.6	18.1	21.1	24.2
MKH-52-DA	8.1	10.1	12.1	16.1	18.1	20.2	22.2	24.2	28.2	32.3
MKH-63-DA	14.2	17.8	21.3	28.4	32.0	35.5	39.1	42.6	49.7	56.8
MKH-75-DA	20.1	25.2	30.2	40.3	45.3	50.3	55.4	60.4	70.5	80.5
MKH-83-DA	30.8	38.5	46.2	61.6	69.4	77.1	84.8	92.5	107.9	123.3
MKH-92-DA	45.4	56.8	68.2	90.9	102.3	113.6	125.0	136.3	159.1	181.8
MKH-105-DA	65.8	82.2	98.7	131.6	148.0	164.4	180.9	197.3	230.2	263.1
MKH-125-DA	103	128	154	205	231	256	282	308	359	410
MKH-140-DA	175	219	263	351	395	439	482	526	614	702
MKH-160-DA	267	334	401	535	601	668	735	802	935	1069
MKH-190-DA	431	538	646	861	969	1077	1185	1292	1508	1723
MKH-210-DA	526	658	789	1052	1184	1316	1447	1579	1842	2105
MKH-240-DA	773	966	1160	1546	1740	1933	2126	2320	2706	3093
MKH-270-DA	1174	1468	1761	2349	2642	2936	3229	3523	34110	4697
MKH-300-DA	1526	1908	2289	3052	3434	3815	4197	4578	5341	6104
MKH-350-DA	2285	2856	3427	4570	5141	5712	6283	6854	7997	9139
MKH-400-DA	3256	4069	4883	6511	7325	8139	8953	9767	11394	13022
MKH-450-DA	5076	6345	7614	10153	11422	12691	13960	15229	17768	20306
MKH-500-DA	7162	8953	10744	14325	16116	17907	19697	21488	25069	28651
MKH-550-DA	9750	12187	14625	19500	21938	24375	26813	29251	34126	39001
MKH-600-DA	12893	16116	19339	25786	29009	32232	35455	38679	45125	51572
MKH-700-DA	21058	26323	31588	42117	47382	52646	57911	63176	73705	84234
MKH-800-DA	32089	40111	48134	64178	72201	80223	88246	96268	112313	128357

Note:MKH series DA400-DA800 actuator,can provide torque production

SPRING RETURN ACTUATOR

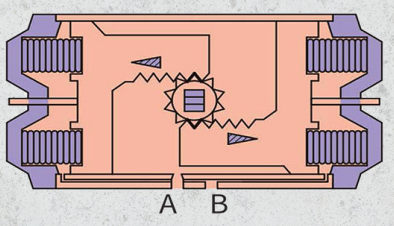

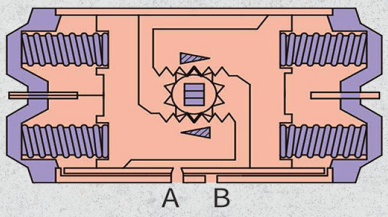

CCW

Air to Port A forces the pistons outwards, causing the springs to compress, the pinion turns counterclockwise while air is being exhausted from Port B.

Loss of air pressure on port A, the stored energy in the springs forces the pistons inwards. The pinion turns clockwise While air is being exhausted from Port A.

C W

Output torque of MKH series spring return pneumatic actuator(Unit: NM)

Model	Air connection (Bar)																		
		2		2.5		3		4		5		6		7		8		output torque	
	Spring Qty	0° Start	90° End	0° Start	90° End	0° Start	90° End	0° Start	90° End	0° Start	90° End	0° Start	90° End	0° Start	90° End	0° Start	90° End	90° Start	0° End
MKH-45-SR	5	3.0	1.2	4.6	2.85													4.6	2.9
	6	2.3	0.2	3.9	1.8	5.4	3.3											5.5	3.5
	7			3.3	0.8	4.8	2.3	7.8	5.3									6.5	4.1
	8					4.2	1.3	7.2	4.3	10.2	7.3							7.4	4.6
	9							6.6	3.4	9.6	6.4	12.6	9.4					8.3	5.2
	10							6.1	2.4	9.0	5.4	12.0	8.4	15.0	11.4	18.1	14.5	9.2	5.8
	11									8.4	4.4	11.4	7.4	14.4	10.4	17.5	13.5	10.1	6.4
	12									7.8	3.5	10.8	6.5	13.8	9.5	16.9	12.6	11.1	7.0
MKH-52-SR	5	3.7	1.6	5.7	3.6													6.2	4.2
	6	2.8	0.3	4.8	2.3	6.8	4.3											7.4	5.1
	7			3.9	1.0	5.9	3.0	9.9	7.0	14.0	11.1							8.6	5.9
	8					5.0	1.7	9.0	5.7	13.1	9.8							9.9	6.8
	9							8.1	4.4	12.2	8.5	16.2	12.5					11.1	7.6
	10							7.2	3.1	11.3	7.2	15.3	11.2	19.3	15.2	23.4	19.3	12.4	8.5
	11									10.4	5.9	14.4	9.9	18.4	13.9	22.5	18.0	13.6	9.3
	12									9.5	4.6	13.5	8.6	17.5	12.6	21.6	16.7	14.8	10.1
MKH-63-SR	5	7.0	3.2	10.6	6.8													10.4	6.8
	6	5.6	1.0	9.2	4.6	12.7	8.1											12.5	8.2
	7			7.7	2.4	11.2	5.9	18.3	13.0	26.8	21.9							14.6	9.6
	8					9.8	3.7	16.9	10.8	24.0	17.9							16.7	10.9
	9							15.4	8.6	22.5	15.7	29.6	22.8					18.8	12.3
	10							14.0	6.4	21.1	13.5	28.2	20.6	35.3	27.7	42.4	34.8	20.9	13.7
	11									19.7	11.3	26.8	18.4	33.9	25.5	41.0	32.6	22.9	32.6
	12									18.2	9.1	25.3	16.2	32.4	23.3	39.5	30.4	25.0	16.4
MKH-75-SR	5	9.0	4.9	14.1	10.0													14.5	10.5
	6	6.8	1.8	11.9	6.9	16.9	11.9											17.4	12.7
	7			9.7	3.9	14.7	8.9	24.8	19.0	35.4	29.9							20.3	14.8
	8					12.4	5.8	22.5	15.9	32.5	25.9							23.2	16.9
	9							20.3	12.9	30.3	22.9	40.4	33.0					26.1	19.0
	10							18.1	9.8	28.1	19.8	38.2	29.9	48.3	40.0	58.3	50.0	29.1	21.1
	11									25.9	16.8	36.0	26.9	46.1	37.0	56.1	47.0	31.9	23.2
	12									23.7	13.7	33.8	23.8	43.9	33.9	53.9	43.9	34.7	25.3
MKH-83-SR	5	14.2	6.6	21.9	14.3													23.0	15.8
	6	10.8	1.7	18.5	9.4	26.2	17.1											27.6	19.0
	7			15.2	4.6	22.9	12.3	3.8	27.7	56.2	46.2							32.2	22.1
	8					19.6	7.4	35.0	22.8	50.5	38.3							36.8	25.3
	9							31.6	18.0	47.1	33.5	62.5	48.9					41.4	28.5
	10							28.3	13.2	43.8	28.7	59.2	44.1	74.6	59.5	90.0	74.9	46.0	31.6
	11									40.5	23.8	55.9	39.2	71.3	54.6	86.7	70.0	50.6	34.8
	12									37.1	19.0	52.5	34.4	67.9	49.8	83.3	65.2	55.2	38.0

Note:MKH series DA400-DA800 actuator,can provide torque production

Output torque of MKH series spring return pneumatic actuator(Unit: NM)

Model	Air connection (Bar)																		
		2		2.5		3		4		5		6		7		8		output torque	
	Spring Qty	0° Start	90° End	0° Start	90° End	0° Start	90° End	0° Start	90° End	0° Start	90° End	0° Start	90° End	0° Start	90° End	0° Start	90° End	90° Start	0° End
MKH-92-SR	5	20	9	32	20													34	23
	6	15	2	27	13	38	24											41	28
	7			22	6	33	17	56	40	80	64							48	32
	8					28	10	51	33	74	55							55	37
	9							46	25	69	48	92	71					61	42
	10							41	18	64	41	87	63	110	86	132	109	68	46
	11									59	34	82	56	105	79	127	102	75	51
	12									54	26	77	49	100	72	122	95	82	56
MKH-105-SR	5	32	14	48	30													49	31
	6	25	3	42	20	58	36											59	38
	7			35	9	52	26	85	59	121	96							68	44
	8					45	15	78	48	111	81							78	50
	9							71	38	104	71	137	104					88	56
	10							65	28	97	60	130	93	163	126	196	159	98	63
	11									91	50	124	83	156	116	189	149	108	69
	12									84	40	117	73	150	105	183	138	118	75
MKH-125-SR	5	47	20	72	45													78	52
	6	36	4	61	29	87	55											94	62
	7			50	12	76	38	127	89	178	141							109	73
	8					65	22	116	73	167	124							125	83
	9							105	56	156	107	208	159					141	94
	10							94	40	145	91	197	143	248	194	299	245	156	104
	11									134	74	186	126	237	177	288	228	172	115
	12									123	58	175	110	226	161	277	212	188	125
MKH-140-SR	5	84	39	128	83													129	85
	6	66	12	110	56	154	100											154	102
	7			92	29	136	73	224	161	380	247							180	120
	8					118	45	206	133	294	221							260	137
	9							188	106	276	194	363	281					232	154
	10							170	79	258	167	345	254	433	342	521	430	257	171
	11									240	140	327	227	415	315	503	403	283	188
	12									222	113	309	200	379	288	485	376	309	205
MKH-160-SR	5	120	47	187	114													208	139
	6	90	3	157	70	224	137											250	168
	7			128	27	195	94	329	228	469	373							292	196
	8					165	50	299	184	432	317							333	223
	9							270	140	403	273	537	407					375	251
	10							241	96	374	229	508	363	641	496	775	630	417	279
	11									344	185	478	319	611	452	745	586	458	307
	12									315	141	449	275	582	408	716	542	500	335
MKH-190-SR	5	220	105	327	212													293	190
	6	178	40	285	147	393	255											352	227
	7			243	82	385	190	566	405	784	631							410	265
	8					309	125	524	340	740	556							469	303
	9							482	275	698	491	913	706					527	341
	10							440	210	656	426	871	641	1087	857	1302	1072	586	379
	11									614	361	829	576	1045	792	1260	1007	645	417
	12									572	296	787	511	1003	727	218	942	703	455
MKH-210-SR	5	237	126	369	258													360	260
	6	179	46	311	178	442	309											432	313
	7			253	99	384	23	647	493	908	754							503	365
	8					326	150	589	413	853	677							575	417
	9							531	333	795	597	1058	860					647	469
	10							473	253	737	517	1000	780	1263	1043	1526	1306	719	521
	11									679	437	942	700	1205	963	1468	1226	791	573
	12									621	357	884	620	1147	883	1410	1146	863	625
MKH-240-SR	5	341	190	534	388													525	389
	6	255	73	448	266	642	460											630	467
	7			361	150	555	344	941	730	1349	1149							735	544
	8					469	227	855	613	1242	1000							840	622
	9							768	496	1155	883	1542	1270					945	700
	10							682	380	1069	767	1456	1154	1842	1540	2229	1927	1050	778
	11									983	650	1370	1370	1756	1423	2143	1810	1155	855
	12									896	533	1283	920	1669	1306	2056	1698	1260	933

Note:MKH series DA400-DA800 actuator,can provide torque production

WWW.HERIOS.KR INFO@HERIOS.KR

Output torque of MKH series spring return pneumatic actuator(Unit: NM)

Model	Air connection (Bar)																		
		2		2.5		3		4		5		6		7		8		output torque	
	Spring Qty	0° Start	90° End	0° Start	90° End	0° Start	90° End	0° Start	90° End	0° Start	90° End	0° Start	90° End	0° Start	90° End	0° Start	90° End	90° Start	0° End
MKH-270-SR	5	585	346	879	640													745	530
	6	467	181	761	475	1054	768											849	636
	7			644	309	937	602	1525	1190	2141	1823							143	742
	8					819	437	1407	1025	1994	1612							1192	848
	9							1289	859	1876	1446	2463	2033					1341	954
	10							1171	694	1758	1281	2345	1868	2932	2455	3519	3042	1490	1060
	11									1640	1115	2227	1702	2814	2289	341	2876	1639	1166
	12									1523	950	2110	1537	2697	2124	3284	2711	1788	1272
MKH-300-SR	5	715	347	1097	729													1061	730
	6	553	112	935	494	1316	875											1273	876
	7			772	258	1153	639	1916	1402									1485	1022
	8					991	403	1754	1166	2517	1929							1697	1168
	9							1592	930	2355	1693	3118	2456					1909	1314
	10							1430	695	2193	1458	3956	2221	3719	2984	4482	3747	2122	1460
	11									2030	1222	2793	1985	3556	2748	4319	3511	2334	1606
	12									1868	986	2631	1749	3394	2512	4157	3275	2546	1752
MKH-350-SR	5	982	393	1553	964													1702	1173
	6	751	15	1292	586	1863	1157											2043	1408
	7			1031	208	1602	779	2745	1922									2383	1642
	8					1341	401	2484	1544	3626	2689							2724	1887
	9							2224	1165	3366	2307	4508	3449					3064	2112
	10							1963	787	3105	1929	4247	3071	5390	4214	6532	5356	3405	2346
	11									2804	1551	3986	2693	5129	3836	6271	4978	3745	2581
	12									2584	1172	3726	2314	4869	3457	6011	4599	4086	2816
MKH-400-SR	7	1215	56	2028	869													2880	1837
	8			1736	411	255	1225											3292	2100
	9					2259	768	3887	2396									3703	2362
	10					1967	311	3595	1939	5223	3567							4115	2624
	11							3303	1482	4931	3110	6559	4738					4526	2887
	12							3012	1025	4640	2653	6268	4281	7895	5908	9523	7536	4938	3149
	13									4348	2195	5976	3823	7603	5450	9231	7078	5349	3412
	14									4057	1738	5658	3866	7312	4993	8940	6621	5761	3674
	15									3765	1281	5393	2909	7020	4536	8648	6164	6172	3937
	16											5101	2452	6728	4079	8356	5707	6584	4199
MKH-450-SR	4					4888	3235	7497	5844	10130	8452	12715	11061	15324	13670	17932	16279	4951	2937
	6					3420	2227	6028	3548	8637	6157	11246	8766	13855	11375	16464	13983	6886	4406
	8							4560	1252	7168	3861	9777	6470	12386	9079	14995	11688	9182	5875
	10									5698	1566	8307	4174	10916	6793	13525	9392	11478	7345
	12											6838	1879	9447	4488	12056	7096	13773	8814
MKH-500-SR	4					7536	5985	11558	9010	15580	13032	19602	17054	23624	21076	27646	25098	7078	4530
	6					5271	2541	9293	5471	13315	9493	17337	13515	21359	17537	25381	21559	10617	6795
	8							7028	1932	11050	5954	15072	9976	19094	13998	23116	18020	14156	9060
	10									8785	2414	12807	6436	16829	10458	20851	14480	17696	11325
	12											10542	2897	14564	6919	18586	10941	21235	13590
MKH-600-SR	4					11589	7670	17774	13855	23960	20041	30145	26226	36330	32410	42516	38596	10885	6966
	6					8106	4008	14290	8412	20476	14598	26661	20782	32846	26967	39032	33153	163328	10449
	8							10807	2968	16993	9154	23178	15339	29362	21524	35548	27710	21771	13933
	10									13509	3711	18694	9896	25879	16081	32065	22267	27214	17416
	12											16212	4454	22396	10639	28582	16825	32656	20899
MKH-700-SR	4							26662	20783	39541	30062	45219	39340	54497	48618	63775	57896	16329	10450
	6							21436	12618	30715	21897	39993	31175	49271	40453	58549	49731	24494	15676
	8							16211	4453	25490	13732	34160	23010	44046	32288	53324	41566	32659	20901
	10									20264	5567	29542	14845	38820	24123	48098	33401	40824	26127
	12											24317	6681	33595	15959	42873	25237	48988	31352
MKH-800-SR	4							46083	35922	62120	51958	78156	67994	94192	84031	110229	100068	28224	18062
	6							37051	21810	53088	37846	69123	53882	85160	69919	101197	85956	42336	27049
	8							28020	7698	44056	23734	60092	39770	76129	55807	92166	71844	56448	36126
	10									35024	9622	51060	25658	67096	41695	83133	57732	70560	45158
	12											42028	11546	58065	27583	74102	43620	84672	54189

Note:MKH series DA400-DA800 actuator,can provide torque production

WWW.HERIOS.KR INFO@HERIOS.KR

SIZING SPRING RETURN ACTUATORS

The suggested safety factor for spring return actuator under normal working conditions is 30%-50%

For example

The torque needed by valave=80N.m
The torque consider safety factor(1+30%)=104N.m
Air supply=5Bar

According to the output torque of spring return actuator, we find output torque of SR 140K7 is:
Air stroke 0° =308N.m
Air stroke 90° =247N.m
Spring stroke 90° =180N.m
Spring stroke 0° =120N.m
All the output torque is larger than we required.

Remark
During the restoration,the spring return actuators' output torque will not be affected by the imputing air from the port B. On the contrary, it will help the restoration of springs.

Economical sizing spring return actuators

During selecting the spring return actuators, we can choose the more reasonable and more economical actuators, if we know the different torque needed by the valve working at opening, operating and closing.

Springs mounting form for spring return actuators

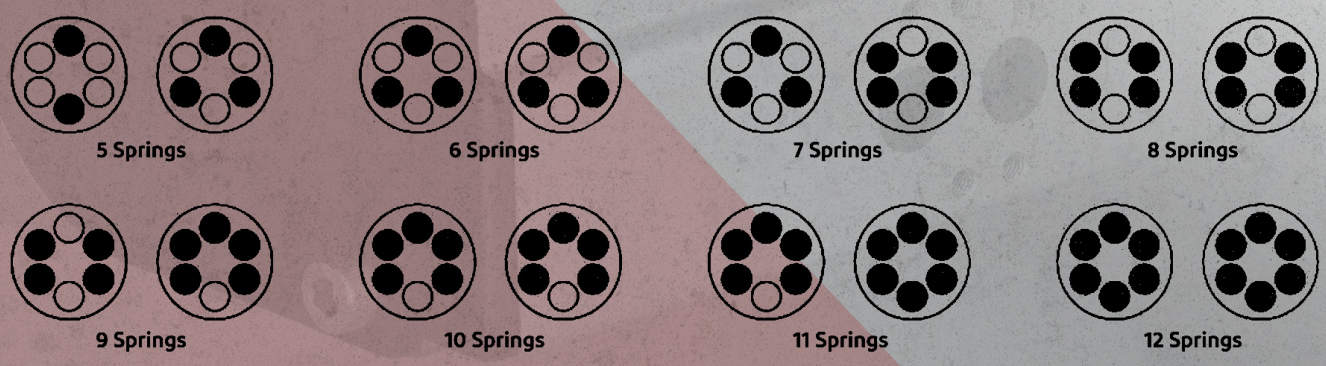

WWW.HERIOS.KR INFO@HERIOS.KR

OUTPUT TORQUE OF SPRING RETURN ACTUATOR

For example

The max torque needed by the butterfly valve=104N.m
The torque after opened (operating)104*30%=32N.m

Air supply=5Bar
Air stroke 90° =74N.m>32N.m
Air stroke 0°=134N.m>104N.m
Spring stroke 0° =115N.m>104N.m
Spring stroke 90°=172N.m>32N.m

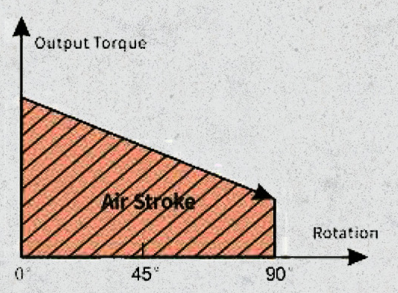

The above data show the actuator's torque can satisfy the requirement of the butterfly valve.

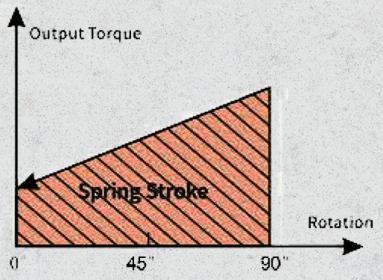

SIZING DOUBLE ACTING ACTUATOR

The suggested safety factor for double acting actuators under normal conditions is 20-30%.

For example

The torque needed by valve=100N.m
The torque considered safety factor(1+30%)=130N.m
Air supply=5Bar
According to the above table, we can choose the minimum model is MKH-105-DA

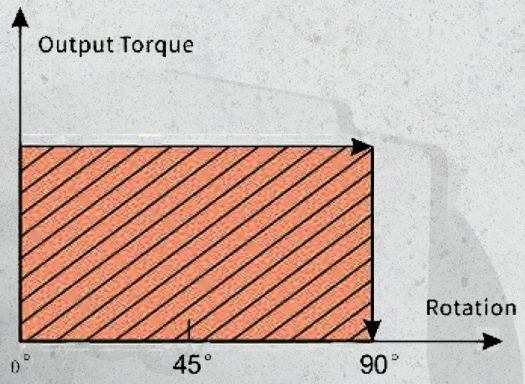

Operating conditions

1-Operating medium; Dry or lubricated air, the non-corrosive gases or oil.
2-Air supply pressure:
Double acting: 2~8Bar
< Spring return:2~8Bar
3-Operating temperature: Standard: -20°C~+80°C
Low temperature: (Down to -40°c)
High temperature:(Up to 150°c)
4- Travel adjustment: Have adjustment range of
±_4° for the rotation at 90°
5-Lubrication: Under normal operating condition, need not accrete lubricant
6-Application: Either indoor or outdoor is Highest pressure: The maximum input pressure is 8 B

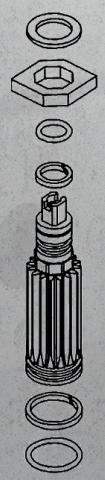

COMMON FAULTS AND TROUBLESHOOTING METHODS

Fault Phenomenon	Inspection items	Solutions
Inaction of Valve	Whether magnetic valve is normal, coil is burned and whether magnetic valve element is stuck by dirt.	Change magnetic valve and coil,clean the dirt.
	Air supply for actuator alone, whether it is running normally. If back flow of cylinder is abnormal, disassembly actuator to check whether sealing parts are damaged and whether inner surface of air cylinder is damaged	Change the damaged sealing ring and cylinder
	Impurities in valve block the ball core	Clear impurities and change valve
	Hand shank of manual operation mechanism vs in manual position	Pull the hand shank to automatic position
	Air source pressure is not enough	Increase air source pressure
Slow Valve Operation and Crawl	Pneumatic actuators thrust is too small	Increase actuator model and specification
	Valve and valve element or other valve parts are assembled too tightly and unreasonably	Repair assembly, adjust thrust
	Too small flow because of air source pipe blockage	Exclude blockage
	Signal power circuit is short circuit or open circuit	Repair power circuit
No signal of Transponder	Camshaft position is inaccurate	Adjust the Camshaft to accurate position
	the microswitch is damaged	Change the microswitch

Air consumption

Air consumption rest with air supply. Air volume and action cycle times, expressions
L/min=Air volume(Air volume Opening+Air volume closing)X
[Air Supply (kap)+101.3 /101.3] X Action cycle times(L/min)

Model	Volume opening	Volume closing	Model	Volume opening	Volume closing
MKH-32-DA	0.04	0.04	MKH-210-DA	7.4	9.7
MKH-45-DA	0.08	0.11	MKH-240-DA	10.7	14.3
MKH-52-DA	0.11	0.14	MKH-270-DA	16.9	22.5
MKH-63-DA	0.2	0.23	MKH-300-DA	23.8	29.7
MKH-75-DA	0.29	0.38	MKH-350-DA	35.1	46.3
MKH-83-DA	0.41	0.55	MKH-400-DA	52.6	36
MKH-90-DA	0.62	0.91	MKH-450-DA		
MKH-105-DA	0.94	1.18	MKH-500-DA		
MKH-125-DA	1.47	1.85	MKH-550-DA		
MKH-140-DA	2.43	3.2	MKH-600-DA		
MKH-160-DA	3.65	5.03	MKH-700-DA		
MKH-190-DA	5.9	7.9	MKH-800-DA		

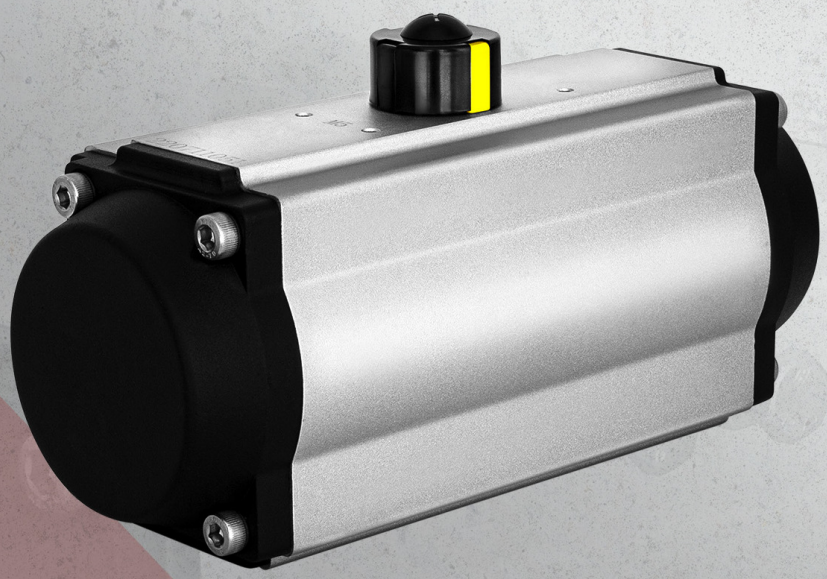

MKH Series Weight Table

Unit Kg

Model	52	63	75	83	92	105	125
weight(DA)	1.38	2.03	2.70	3.13	4.60	6.77	8.90
weight (SR)	1.45	2.05	2.90	3.60	5.22	6.85	10.10

Model	140	160	190	210	240	270
weight(DA)	13.25	20.14	31.30	46.80	67.28	96.90
weight (SR)	15.55	24.00	35.25	54.80	80.20	118.00

WWW.HERIOS.KR INFO@HERIOS.KR

Manufacturer: HERIOS

- Korea Office:

Address: 6381 Bongeunsa-ro, Icheon-si, Gyeonggi,South Korea

- Italy Office :

Address: Viale Luca Gaurico, 9/11, 00143 Roma RM, Italy

Tel: + 39 342 978 800

Tel: + 82 10-4888-2816

Fax: + 82 10-4888-2816

Email: info@herios.kr

Homepage : https://herios.kr/